AG533

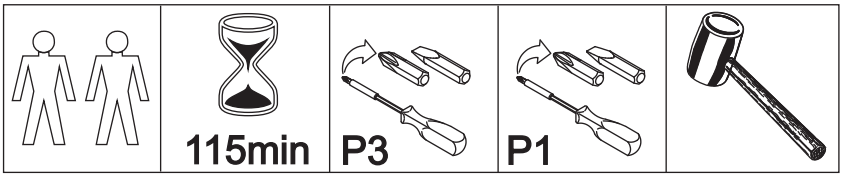

Thank you for choosing this furniture.

BEFORE YOU START ASSEMBLY please store the carton at room temperature for 48 hours or more so the contents can acclimatise.

PLEASE RETAIN ALL PACKING UNTIL YOU HAVE COMPLETED ASSEMBLY.

Information about your Pine furniture.
Our pine furniture ranges have been carefully crafted from solid wood and wood fibre based composite boards. Each piece of pine has unique characteristics such as knots, variances in shading and graining. These are part of the natural character of the furniture itself.

Caring for your Pine furniture.
Extreme temperature can cause slight movements in the wood itself so please avoid placing your furniture close to radiators or other direct sources of heat. Humidity should also be avoided.
Please avoid exposing your furniture to continued bright sunlight as it can affect the colour.
Any fluid spills should be removed as quickly as possible.
Always lift your furniture when moving as dragging may cause damage to your furniture or flooring.

After care.
Wipe the surfaces with a dry cloth and an occasional use of a normal household furniture polish. For the models with drawers, we also recommend you use household spray polish occasionally on drawer grooves and runners as this will aid use. Please do not use detergents or chemicals on your furniture.

PARTS LIST

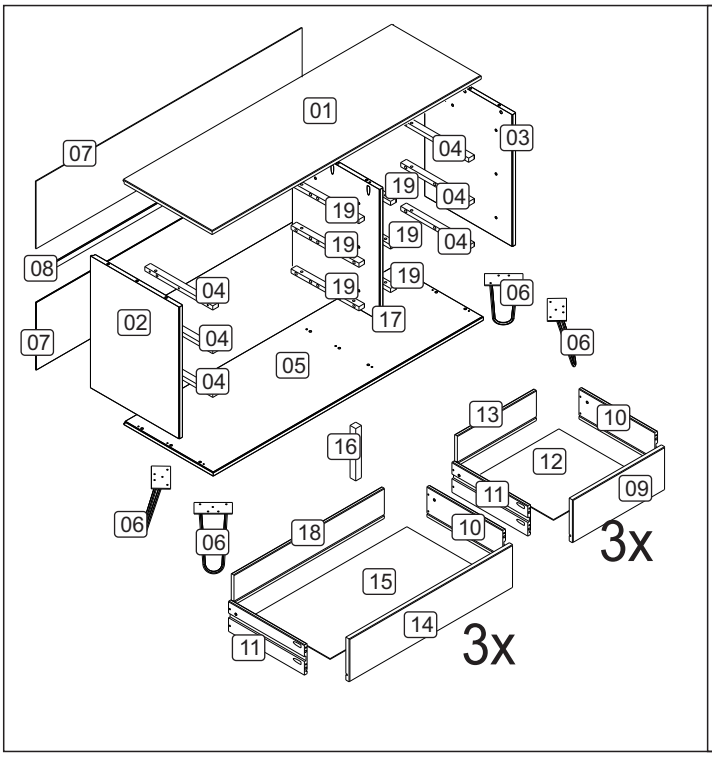

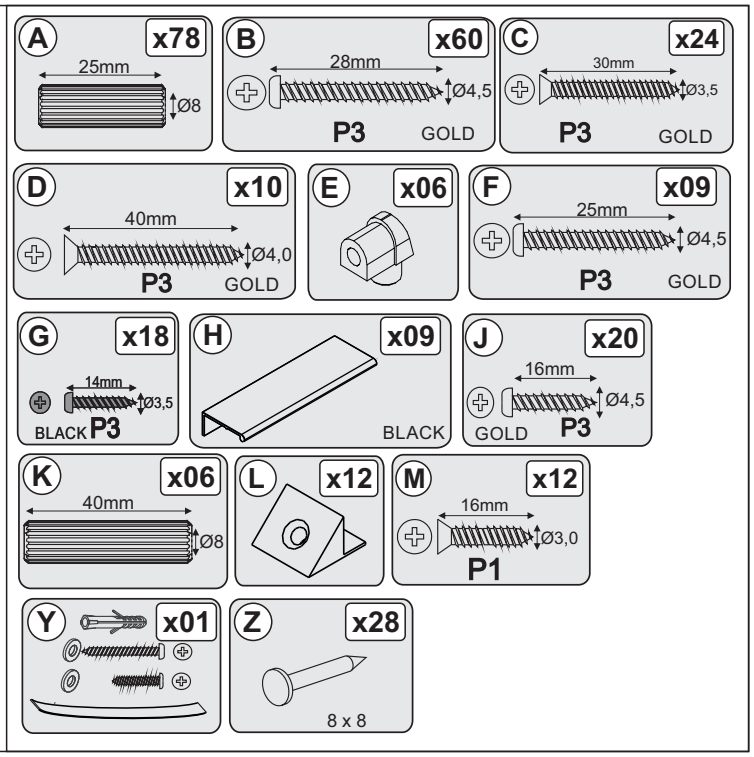

BEFORE YOU START ASSEMBLY

Please check that you have all the correct parts and fittings as detailed on the assembly instructions.

FOR DAMAGED/REPLACEMENT PARTS
Please visit
www.coreproducts.co.uk/parts

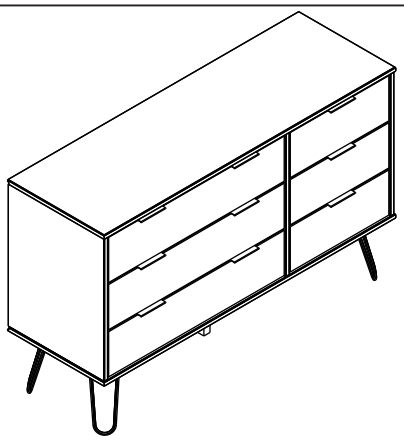

Batch Number 2022-0130

PLEASE RETAIN THIS LEAFLET ALONG WITH YOUR DELIVERY NOTE/RECEIPT FOR FUTURE REFERENCE

© Core Products 9/2020

01

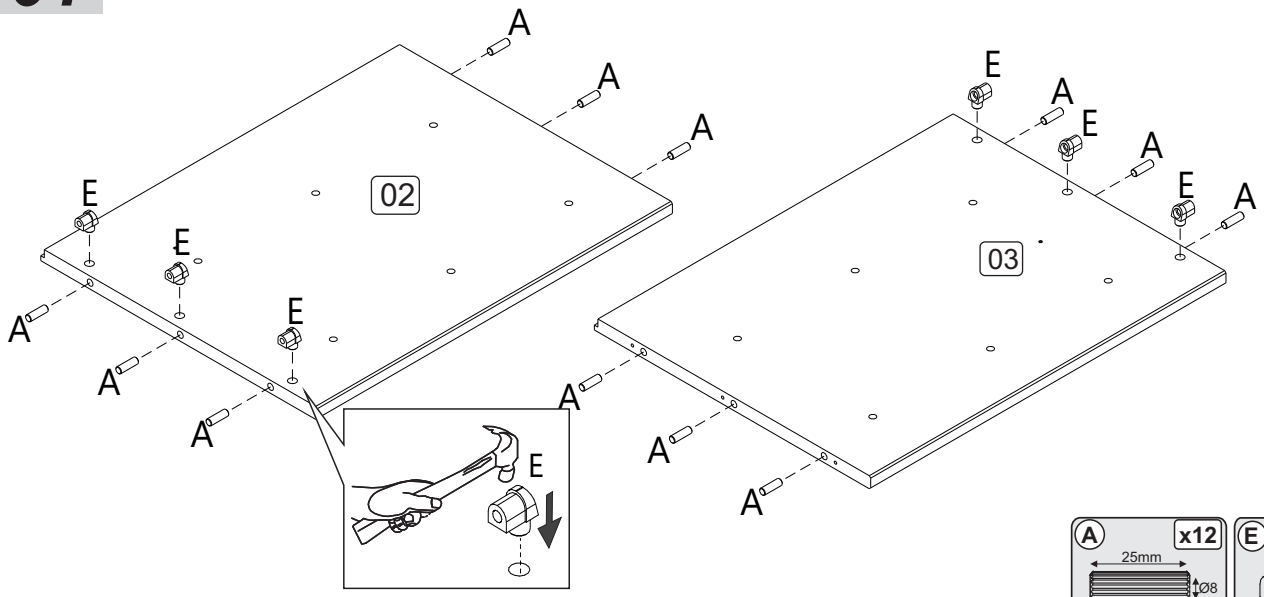
A
A
A
E
E
E
02
A
A
A
E
A
A
A
E
A
E
A
03
A x12
25mm
Ø8
E x06

02

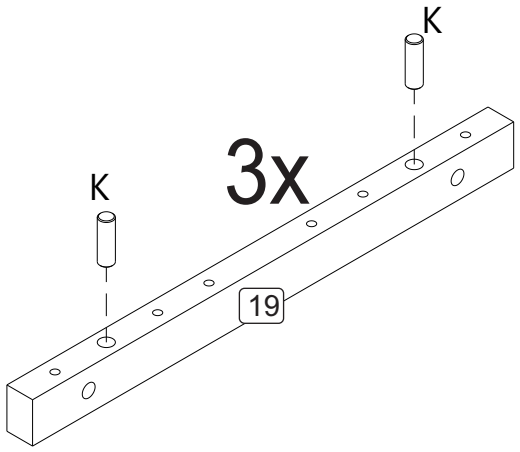
K
3x
K
19
K x06
40mm
Ø8

03

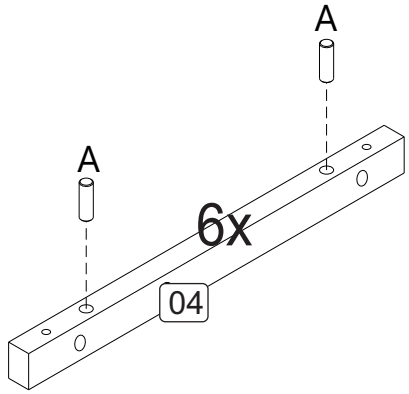
A
A
6x
04
A x12
25mm
Ø8

04

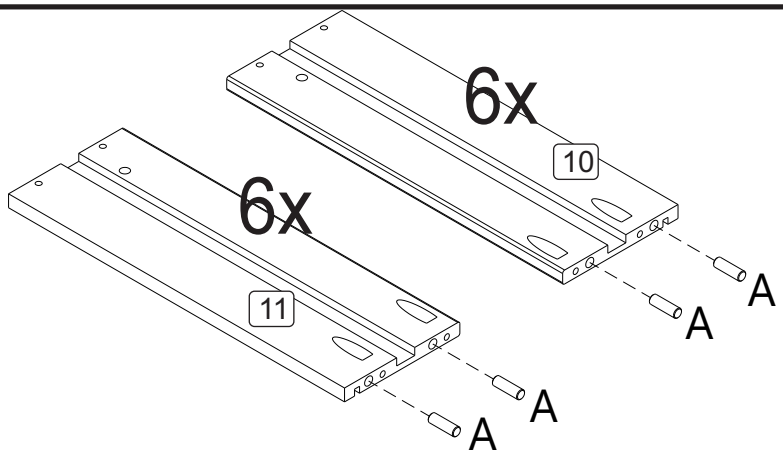
6x
10
6x
11
A
A
A
A
A x24
25mm
Ø8

05

Ensure the drawer runner side with 2 holes for dowels part 04 is facing towards the top of the panel.

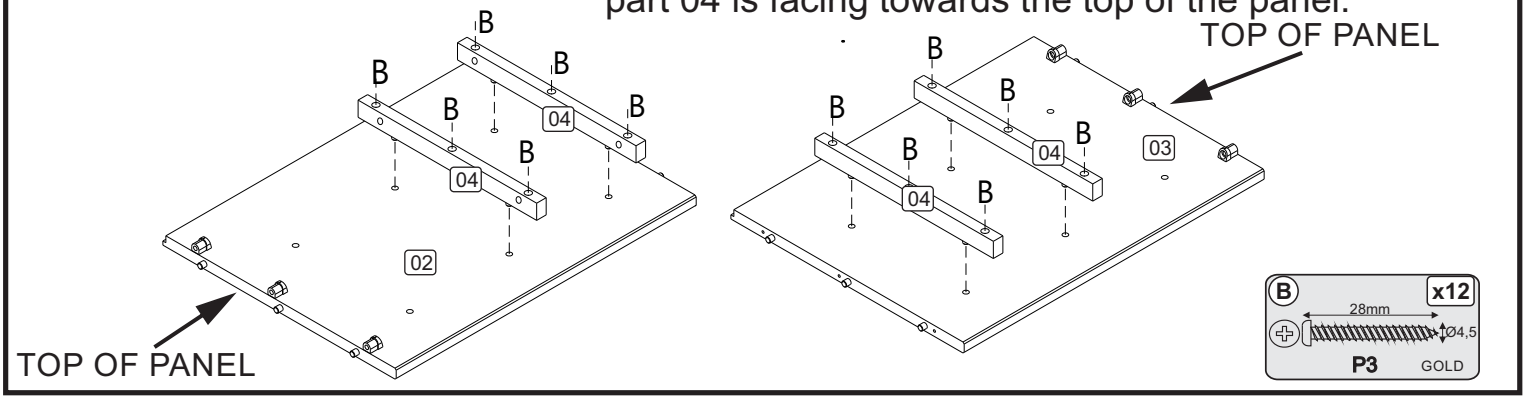

06

Ensure the drawer runner side with 2 holes for dowels part 19 is facing towards the top of the panel.

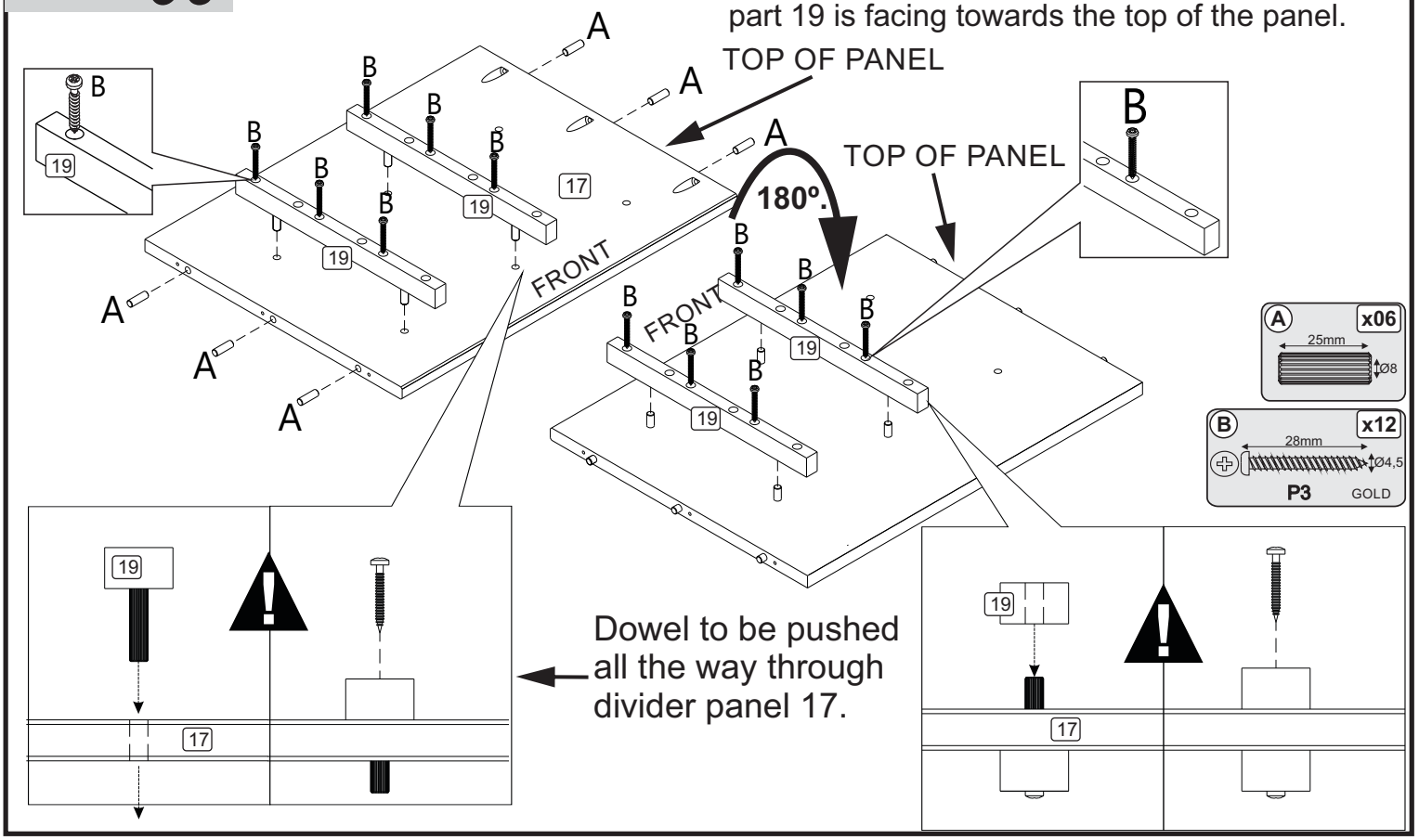

07

Build your furniture on a soft clean cover to stop the components getting marked during assembly.

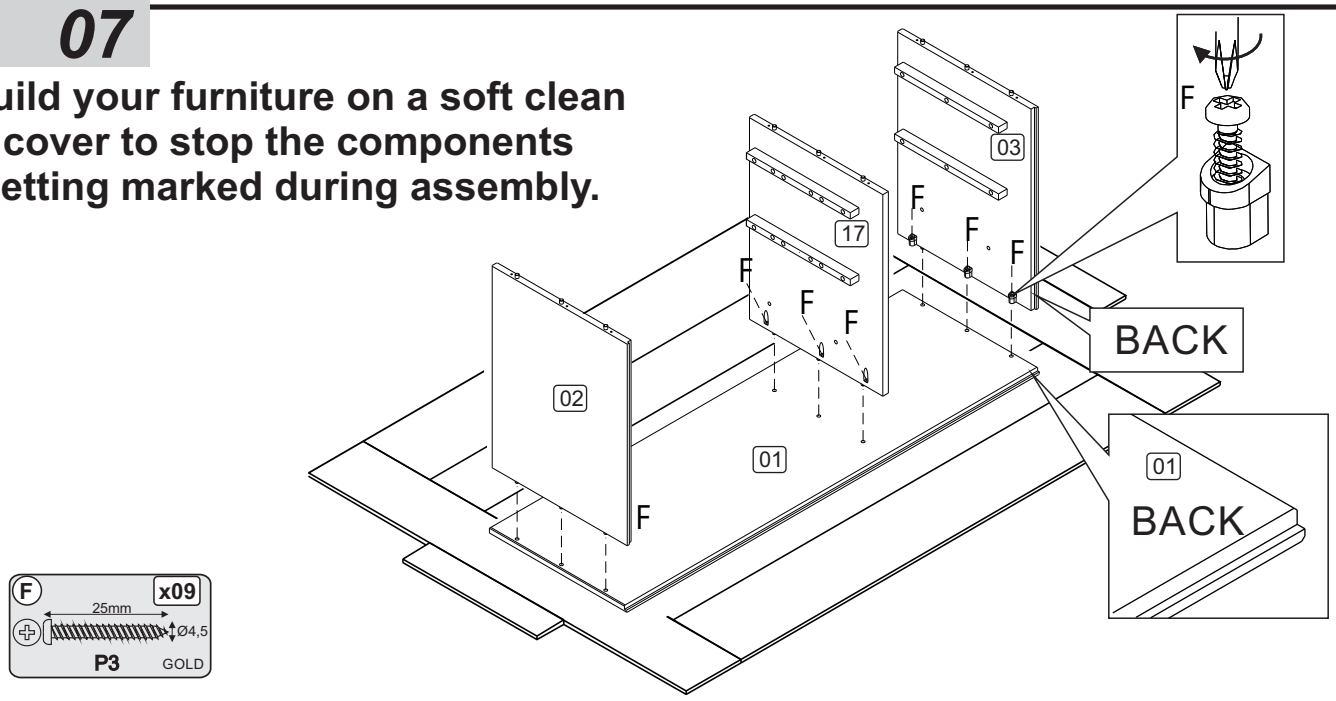

08

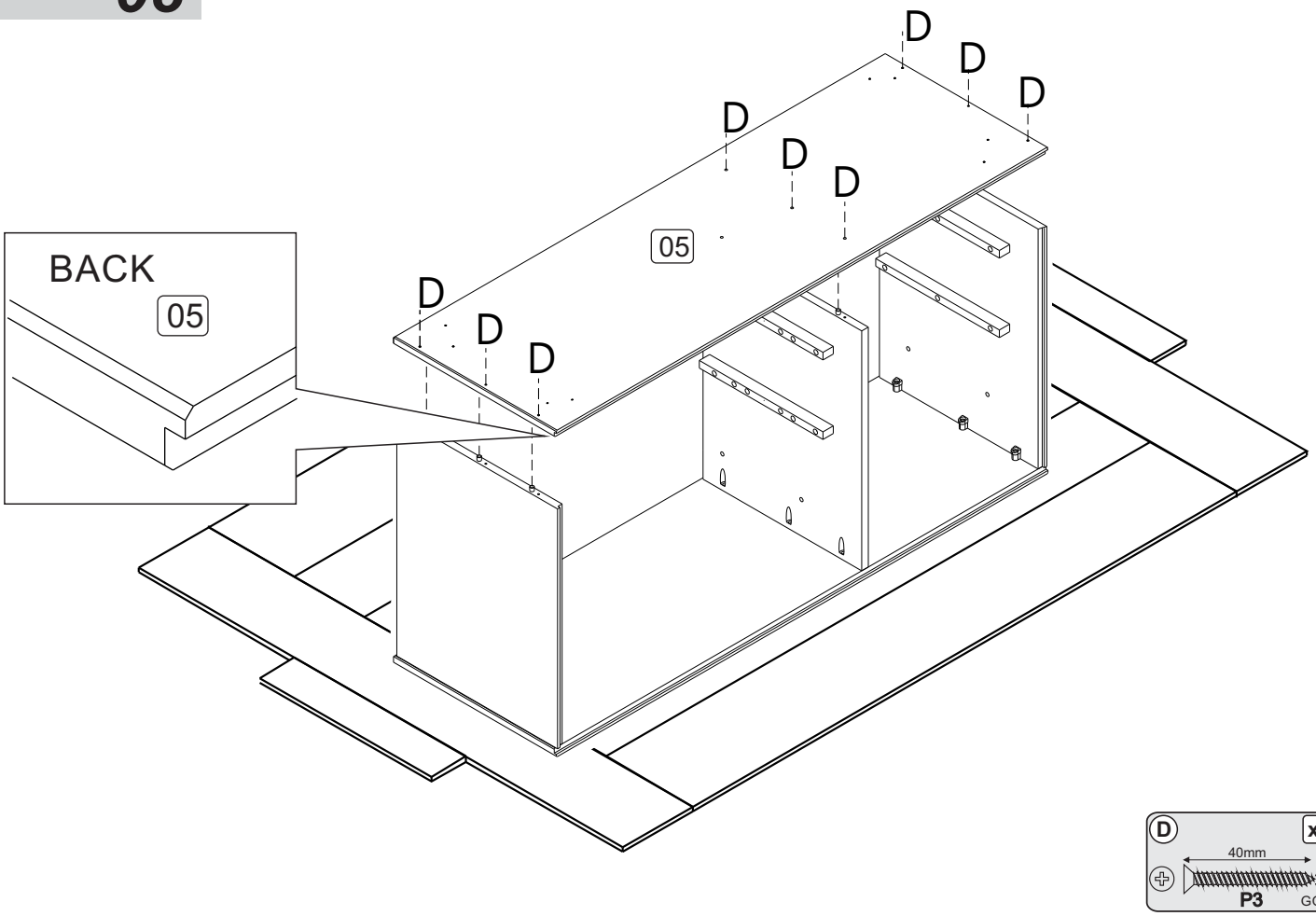

09

Dowel to be pushed all the way through divider panel 17.

Ensure the drawer runner side with 2 holes for dowels part 19 is facing towards the top of the panel.

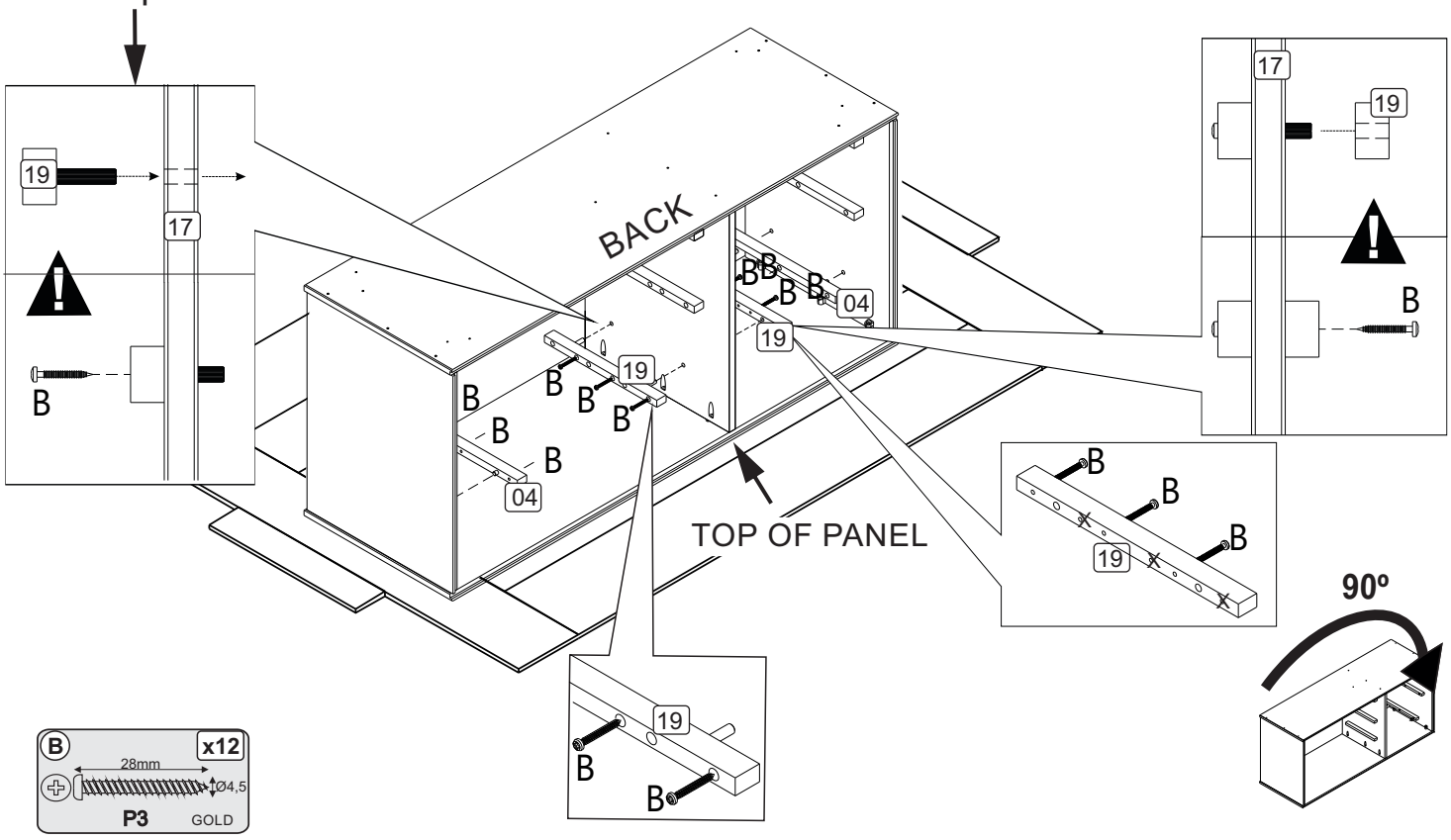

10

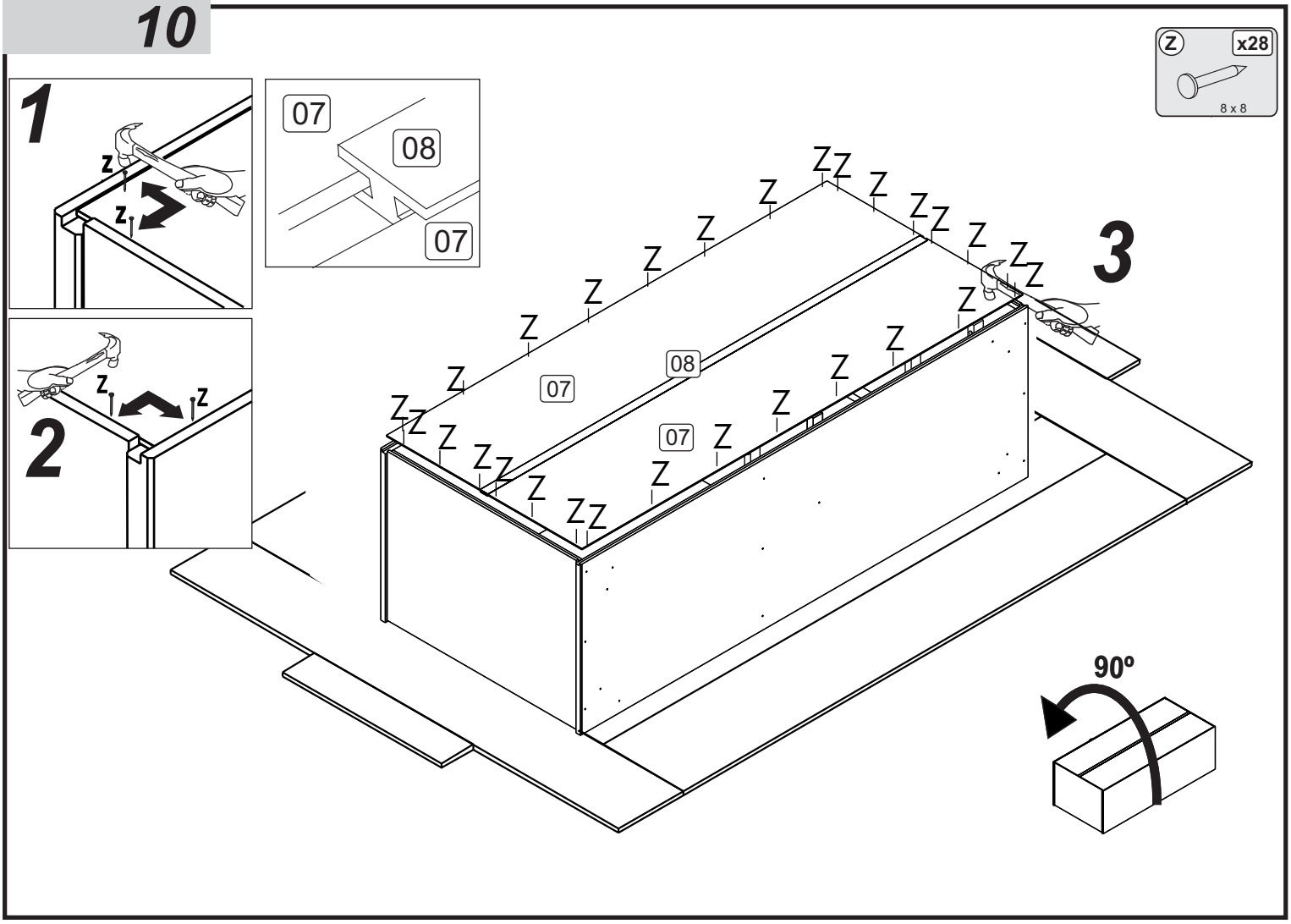
1
2
3
07
08
07
Z
x28
8 x 8
90º

11

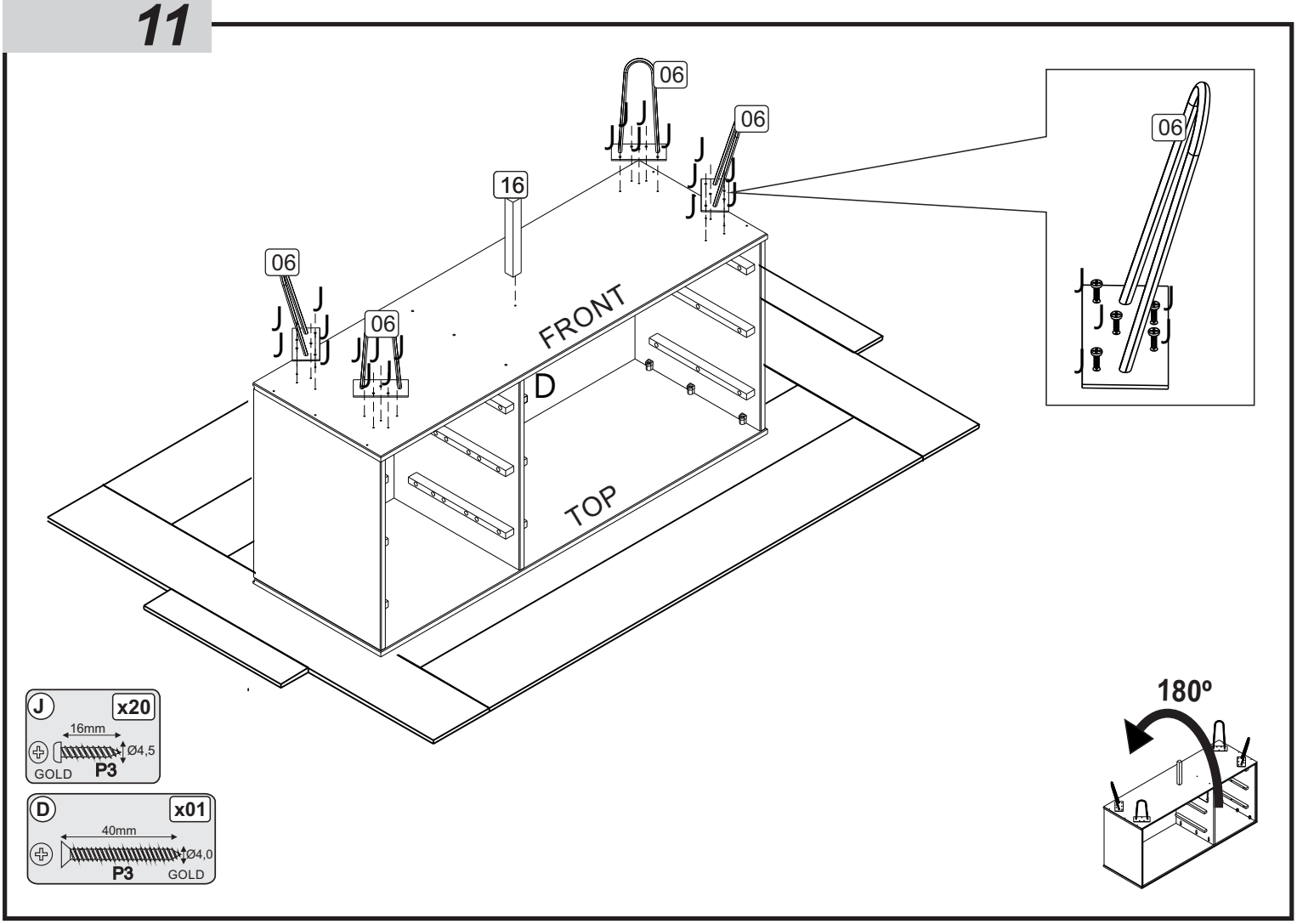
06
06
16
06
06
06
FRONT
D
TOP
J
x20
16mm
Ø4,5
GOLD
P3
D
x01
40mm
Ø4,0
P3
GOLD
180º

12

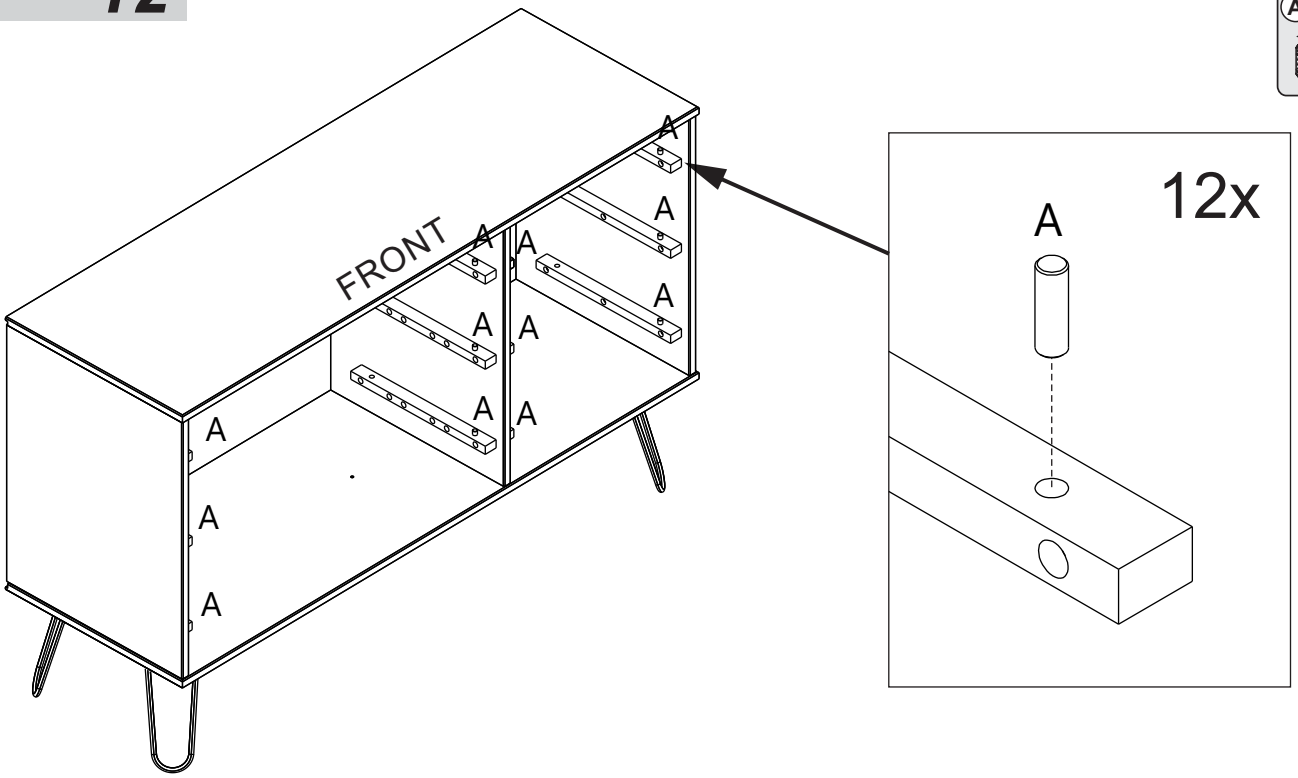
FRONT
A
12x

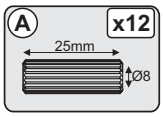
A
x12
25mm
Ø8

13

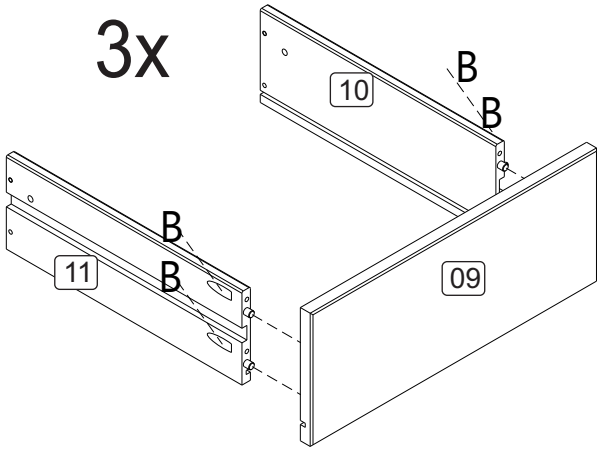
3x
10
11
09
B

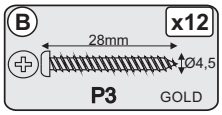
B
x12
28mm
Ø4,5
P3
GOLD

14

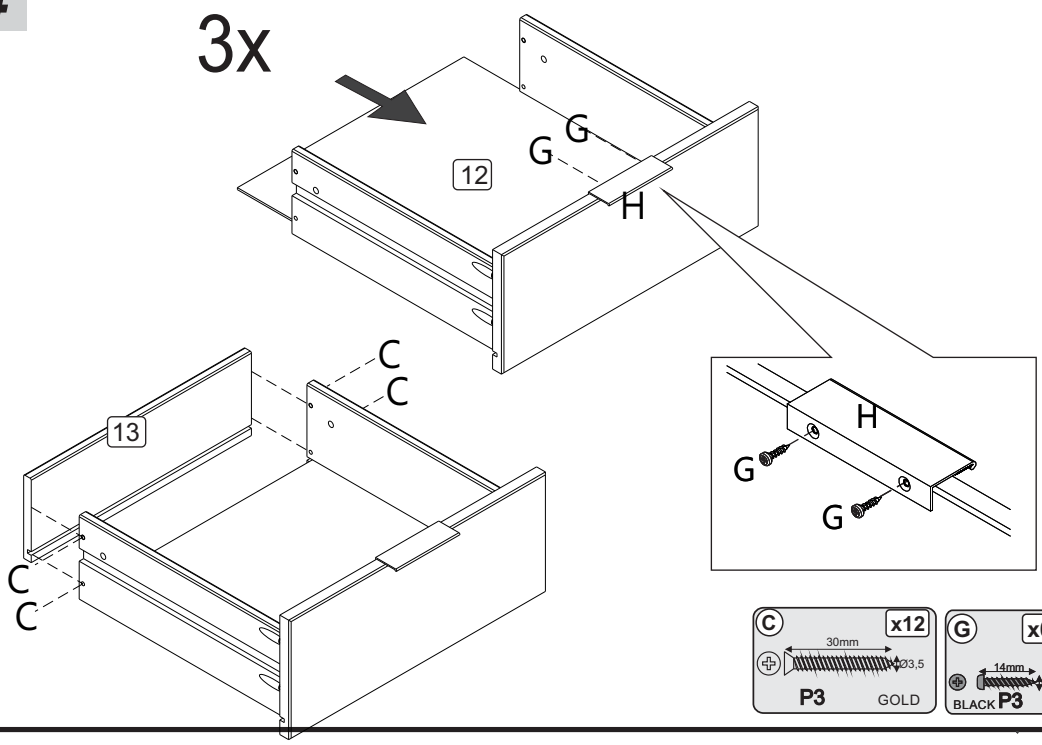
3x
12
13
G
H
C

C
x12
30mm
Ø3,5
P3
GOLD

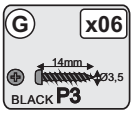
G
x06
14mm
Ø3,5
BLACK
P3

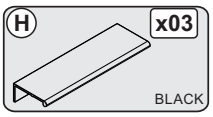
H
x03
BLACK

15

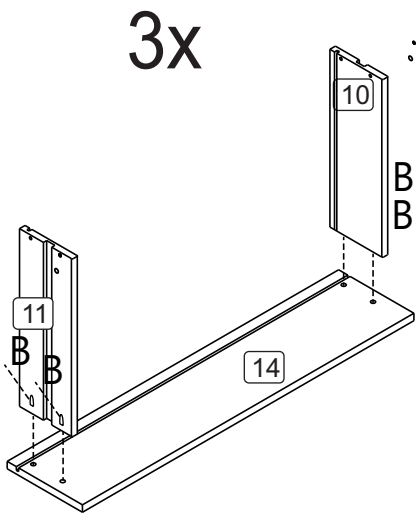

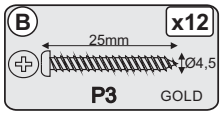

16

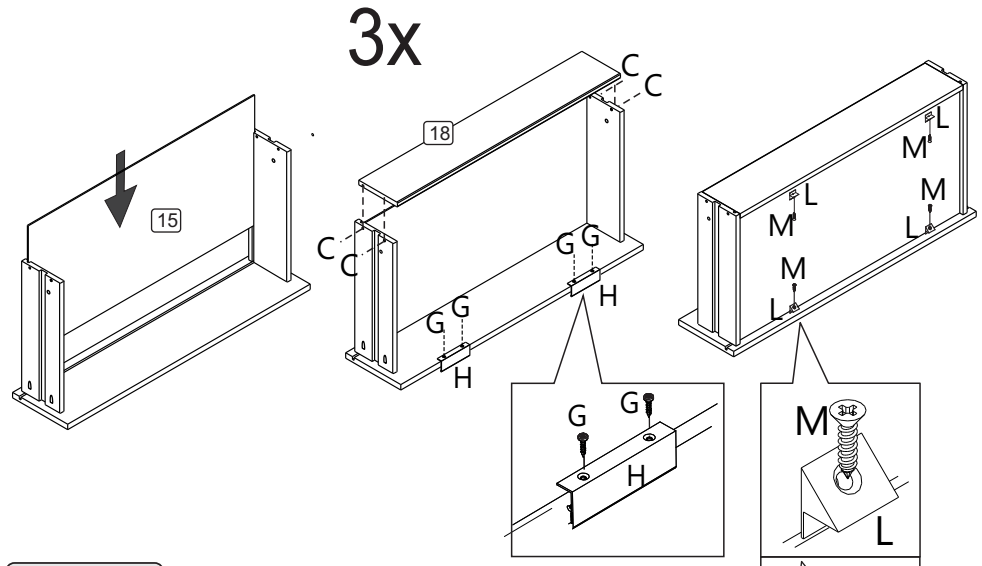

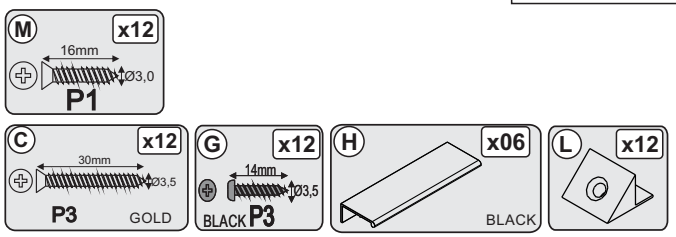

17

Fixing drawer safety stops
1; Insert drawers into frame
by approximately 50mm.

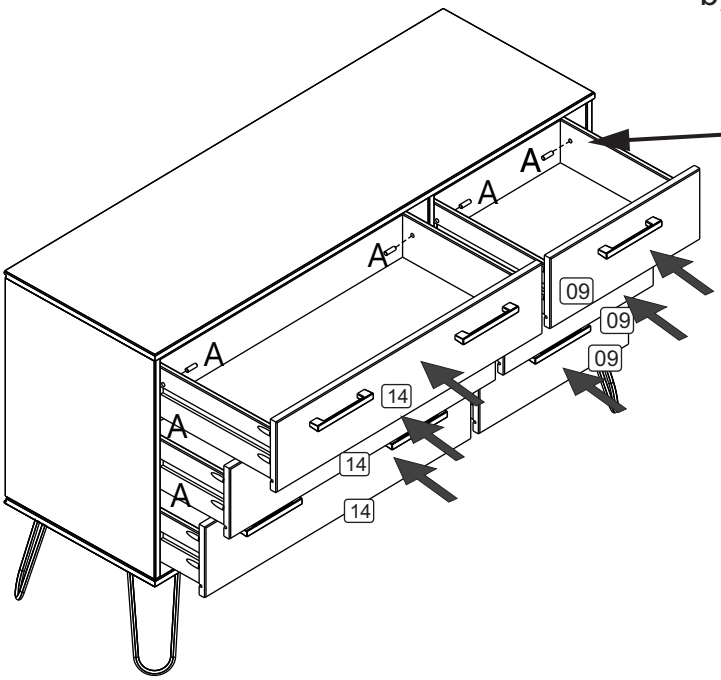

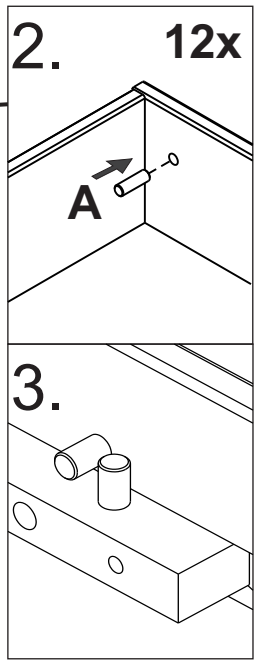

2; Push wooden dowels in through the pre-drilled holes close to the back of the drawer sides until they are level with the inside edge of the drawer sides.

3; Check the position of the drawer stops are correct by opening and closing the drawers.

IMPORTANT NOTICE

Please avoid opening all drawers simultaneously as this could cause your furniture to fall forwards. Where there is a risk of this occurring, especially in environments with children or uneven floors we recommend that this item of furniture is attached to your wall using appropriate fixings (supplied).

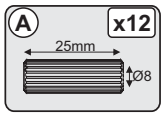

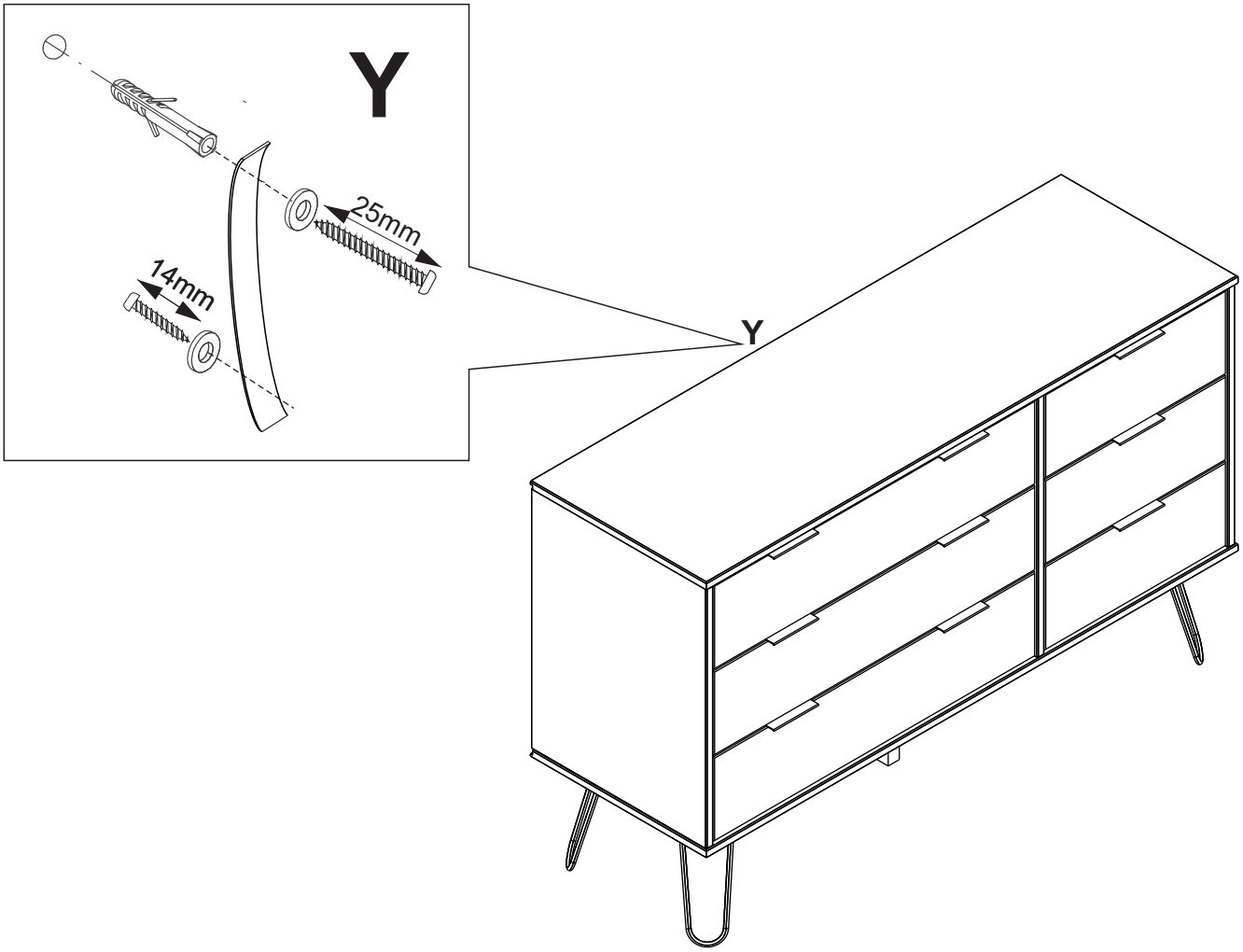

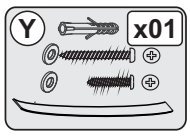

WARNING: CHECK FOR HIDDEN PIPES AND CABLES BEFORE DRILLING.

IMPORTANT: IF YOUR WALLS ARE NOT SOLID LIKE BRICK OR STONE, YOU WILL REQUIRE SPECIALIST FITTINGS (NOT SUPPLIED).

- Place fixing strip against the wall and mark position for drilling hole.
- Drill hole in your wall to a depth of 30mm using a 6mm drill bit. If the surface of your wall is soft and crumbly, we would advise you to use a 5mm drill bit for a tighter fit.
- Insert plug into hole with end flush to the wall surface.
- Attach fixing strip to the wall using the 25mm screw + washer and securely tighten.
- Pre-drill small pilot hole on the back edge of the furniture top using a 2mm drill bit. Attach the other end of fixing strip to the back edge of the furniture top using the 14mm screw + washer and securely tighten.